Centre No.						Surname	Initial(s)
Candidate No.						Signature	

Paper Reference

4400/1F

Examiner's use only

Team Leader's use only

London Examinations IGCSE

Mathematics

Paper 1F

Foundation Tier

Thursday 12 May 2005 – Morning

Time: 2 hours

Page Numbers	Leave Blank
3	
4	
5	
6	
7	
8	
9	
10	
11	
12	
13	
14	
15	
16	
17	
18	
Total	

Materials required for examination

Ruler graduated in centimetres and millimetres, protractor, compasses, pen, HB pencil, eraser, calculator. Tracing paper may be used.

Items included with question papers

Nil

Instructions to Candidates

In the boxes above, write your centre number, candidate number, your surname, initial(s) and signature.
The paper reference is shown at the top of this page. Check that you have the correct question paper.
Answer **ALL** the questions in the spaces provided in this question paper.
Show all the steps in any calculations.

Information for Candidates

There are 20 pages in this question paper. All blank pages are indicated.
The total mark for this paper is 100. The marks for parts of questions are shown in round brackets: e.g. **(2)**.
You may use a calculator.

Advice to Candidates

Write your answers neatly and in good English.

This publication may be reproduced only in accordance with Edexcel Limited copyright policy.
©2005 Edexcel Limited.

Printer's Log. No.
N22126A
W850/R4400/57570 4/4/4/4/4/2/2/2/1000

N 2 2 1 2 6 A 0 1 2 0

Turn over

edexcel INTERNATIONAL

IGCSE MATHEMATICS 4400

FORMULA SHEET – FOUNDATION TIER

Pythagoras' Theorem
$a^2 + b^2 = c^2$

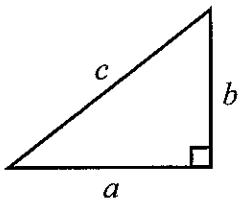

Area of a trapezium = $\frac{1}{2}(a + b)h$

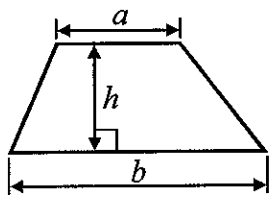

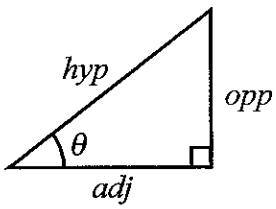

adj = hyp × cos θ
opp = hyp × sin θ
opp = adj × tan θ

or $\sin\theta = \frac{\text{opp}}{\text{hyp}}$

$\cos\theta = \frac{\text{adj}}{\text{hyp}}$

$\tan\theta = \frac{\text{opp}}{\text{adj}}$

Volume of prism = area of cross section × length

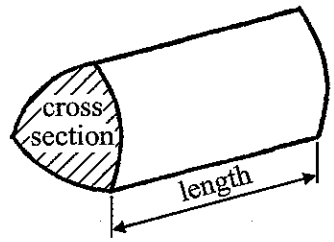

Circumference of circle = $2\pi r$

Area of circle = πr^2

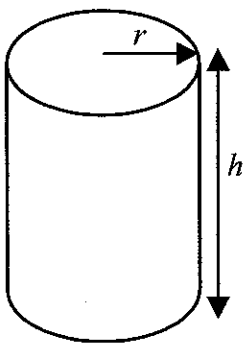

Volume of cylinder = $\pi r^2 h$

Curved surface area of cylinder = $2\pi rh$

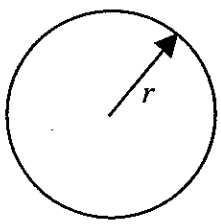

N 2 2 1 2 6 A 0 2 2 0

Leave blank

Answer ALL TWENTY THREE questions.

Write your answers in the spaces provided.

You must write down all stages in your working.

1. (a) Write the number **six thousand and twenty** in figures.

.....

(1)

(b) Write the number 3267 correct to the nearest ten.

.....

(1)

(c) Write down the value of the 7 in the number 7382

.....

(1) **Q1**

(Total 3 marks)

2.

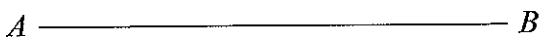

(a) Measure the length of the line *AB*.
Give your answer in millimetres.

..... mm

(1)

(b) In the space above, draw the circle which has *AB* as a diameter.

(2) **Q2**

(Total 3 marks)

Leave blank

3. The bar chart shows the life expectancy, in years, of women and of men in each of 5 countries.

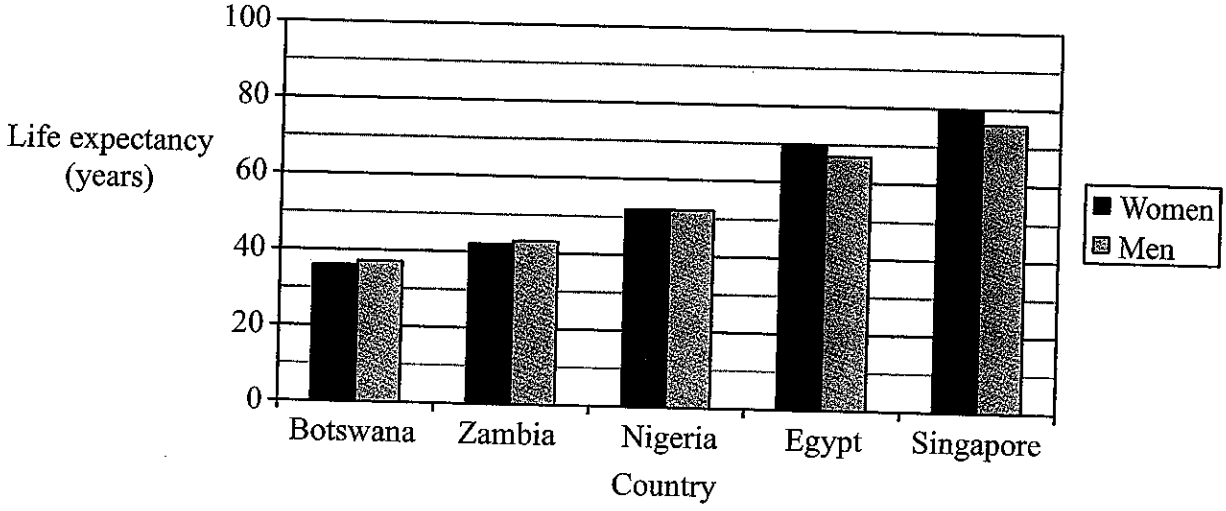

(a) In which country is the life expectancy of men the same as that of women?

.....

(1)

(b) Write down the life expectancy of women in Egypt.

..... years

(1)

(c) Write down the life expectancy of men in Botswana.

..... years

(1)

(d) In which country is 43 years the life expectancy of men?

.....

(1)

Emily says,

"The bar chart shows that, for the 5 countries, the range of the life expectancy of women is greater than the range of life expectancy of men."

(e) Explain why Emily is right.

.....

.....

(2)

Q3

(Total 6 marks)

Leave blank

4. (a) Write down the number which is exactly halfway between 0.3 and 0.4

.....

(1)

(b) Write down the value of the 4 in the number 0.746

.....

(1)

(c) Here is a list of numbers.

0.3 0.32 0.02 0.23 0.03

Write these numbers in order of size.
Start with the smallest.

.....

(1)

(d) Write $\frac{3}{4}$ as a decimal.

.....

(1)

(e) Write 0.7 as a percentage.

.....%

(1)

(f) Write 9% as a decimal.

.....

(1)

Q4

(Total 6 marks)

Leave blank

5. Each of these shapes is made from a square and a triangle.

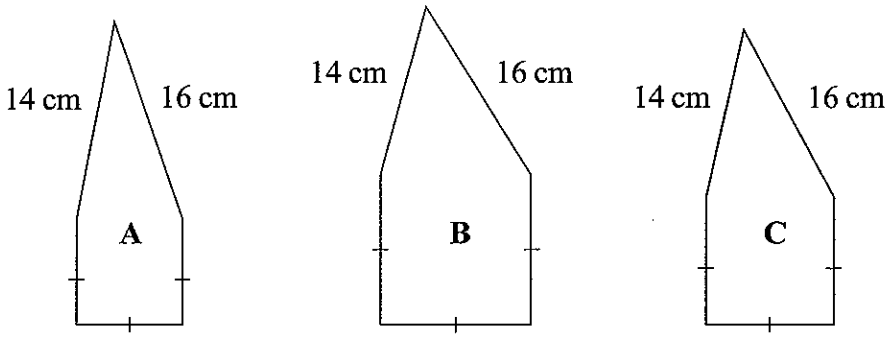

Diagrams **NOT** accurately drawn

This rule can be used to find the perimeter, in cm, of the shapes.

To find the **perimeter**

Multiply the length of one side of the square by 3

Then add 30

(a) For shape **A**, the length of one side of the square is 7 cm.

Work out the perimeter of shape **A**.

..... cm
(2)

(b) The perimeter of shape **B** is 57 cm.

Work out the length of one side of the square for shape **B**.

..... cm
(2)

(c) For shape **C**, the length of one side of the square is y cm.

Write down, in terms of y, an expression for the perimeter, in cm, of shape **C**.
Give your expression as simply as possible.

.....
(2)

Q5

(Total 6 marks)

Leave blank

6. Here is a quadrilateral.

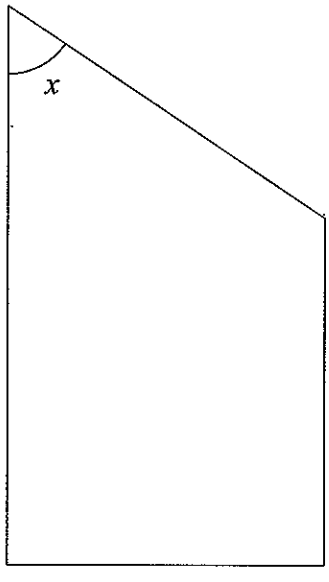

The quadrilateral has a pair of parallel sides.

(a) Mark with arrows (>) the pair of parallel sides.

(1)

(b) Write down the mathematical name of the quadrilateral.

.....

(1)

(c) Mark with the letter R a right angle.

(1)

(d) Measure the size of angle x.

.....°

(1)

Q6

(Total 4 marks)

Leave blank

7. (a) Round 8.621 to the nearest whole number.

.....

(1)

(b) Round 26.8642 to 2 decimal places.

.....

(1)

Kim wants to work out an estimate for the answer to 213×0.693 without using her calculator.

(c) Write down two numbers which Kim could multiply together to work out her estimate.

..... and .....

(2)

Q7

(Total 4 marks)

8. (a) Simplify $d + d + d + d$

.....

(1)

(b) Simplify $3h + 5h - 2h$

.....

(1)

(c) Simplify $8 \times m \times n$

.....

(1)

(d) Simplify $3p - 2q + 4p - 6q$

.....

(2)

(e) Simplify $y \times y \times 5$

.....

(1)

Q8

(Total 6 marks)

Leave blank

9. Here are 8 letters.

A F H N

P S U X

(a) Write down the two letters which have exactly **one** line of symmetry.

....., ...

(1)

(b) Write down the two letters which have rotational symmetry of order 2 and **two** lines of symmetry.

....., ...

(2)

(c) Write down the two letters which have rotational symmetry of order 2 and **no** lines of symmetry.

....., ...

(2)

Q9

(Total 5 marks)

Leave blank

10. (a) Write a number on the dotted line so that the calculation is correct.

..... ÷ 9 = 26

(1)

(b) Find the value of $(6+7)\times 3$

.....

(1)

(c) Put brackets in the expression below so that the answer is 88.

$3 \times 2 + 5 \times 8$

(1)

(d) Find the value of 3^5

.....

(1)

(e) Find $\sqrt{5.29}$

.....

(1)

(f) Find the cube root of 4913

.....

(1) **Q10**

(Total 6 marks)

Leave blank

11. The diagram shows a kite $ABCD$.

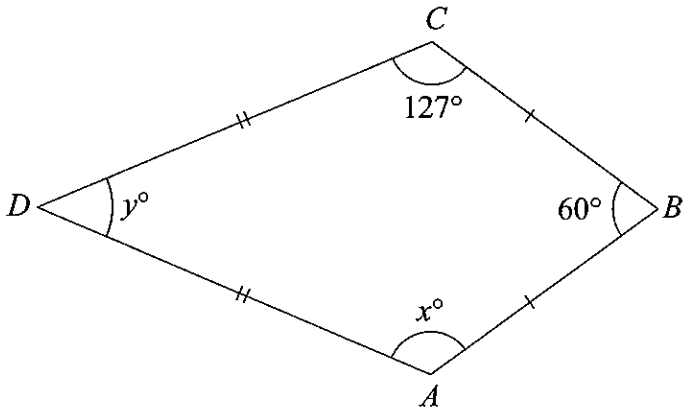

Diagram **NOT** accurately drawn

(a) (i) Write down the value of x.

$x =$ .....

(ii) Give a reason for your answer.

.....

(2)

(b) (i) Work out the value of y.

$y =$ .....

(ii) Give a reason for your answer.

.....

(2)

(c) Show that ABC is an equilateral triangle.

(2) **Q11**

(Total 6 marks)

Leave blank

12. Use your calculator to work out the value of $\frac{9.5-3.7}{1.3\times 2.4}$

Write down all the figures on your calculator display.

.....

(Total 2 marks)

Q12

13. Solve $5(2x+3)=30$

$x =$ .....

(Total 3 marks)

Q13

Leave blank

14. Work out $\frac{5}{6} - \frac{4}{9}$

Give your answer as a fraction in its simplest form.

.....

(Total 2 marks)

Q14

15.

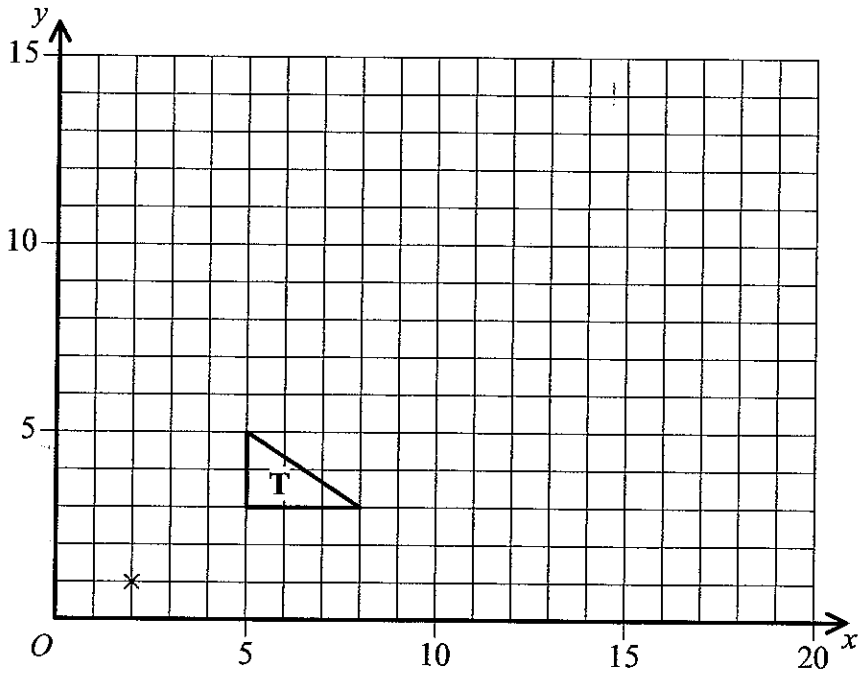

On the grid, enlarge triangle T with a scale factor of 3 and centre (2, 1).

(Total 3 marks)

Q15

Leave blank

16. The probability that a person chosen at random has brown eyes is 0.45
The probability that a person chosen at random has green eyes is 0.12

(a) Work out the probability that a person chosen at random has either brown eyes **or** green eyes.

.....

(2)

250 people are to be chosen at random.

(b) Work out an estimate for the number of people who will have green eyes.

.....

(2) **Q16**

(Total 4 marks)

17. (a) Factorise $9p + 15$

.....

(1)

(b) Factorise $q^2 - 4q$

.....

(1) **Q17**

(Total 2 marks)

Leave blank

18.

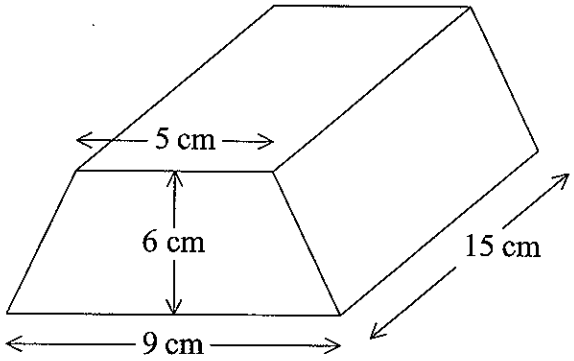

Diagram **NOT** accurately drawn

The diagram shows a prism.
The cross section of the prism is a trapezium.
The lengths of the parallel sides of the trapezium are 9 cm and 5 cm.
The distance between the parallel sides of the trapezium is 6 cm.
The length of the prism is 15 cm.

(a) Work out the area of the trapezium.

..... cm^2
(2)

(b) Work out the volume of the prism.

..... cm^3
(2)

Q18

(Total 4 marks)

Leave blank

19. In a sale at *Supersavers*, all the normal prices are reduced by $\frac{1}{3}$.
The normal price of a scanner is £69

(a) Work out the sale price of the scanner.

£.....
(2)

In a sale at *Bargain Buys*, all the normal prices are reduced by 15%.
The normal price of a printer is £240

(b) Work out the sale price of the printer.

£.....
(3)

(Total 5 marks)

Q19

20. The size of each exterior angle of a regular polygon is 18°.

(a) Work out how many sides the polygon has.

.....
(2)

(b) Work out the **sum** of the interior angles of the polygon.

°
.....
(2)

(Total 4 marks)

Q20

Leave blank

21. The table gives information about the ages, in years, of the 80 members of a sports club.

Age (t years)	**Frequency**
$10 < t \leqslant 20$	8
$20 < t \leqslant 30$	38
$30 < t \leqslant 40$	28
$40 < t \leqslant 50$	4
$50 < t \leqslant 60$	2

The names of all 80 members are put into a bag.
The name of one member is taken at random from the bag.

(a) Find the probability that the age of this member is over 40 years.

.....

(2)

(b) Work out an estimate for the mean age of the 80 members.

..... years

(4)

Q21

(Total 6 marks)

Leave blank

22. The height of a hall is 12 m.
A scale model is made of the hall.
The height of the scale model of the hall is 30 cm.

(a) Express the scale of the model in the form $1 : n$

.....
(3)

The length of the scale model of the hall is 95 cm.

(b) Work out the real length of the hall.
Give your answer in metres.

..... m
(3)

Q22

(Total 6 marks)

23. (a) Solve the inequality $2x - 3 < 5$

.....
(2)

(b) n is a positive integer.

Write down all the values of n which satisfy the inequality $2n - 3 < 5$

.....
(2)

Q23

(Total 4 marks)

TOTAL FOR PAPER: 100 MARKS

END